WC-3 COMMON AREA WATER CLOSET

TOTO®

CST244EF(R)

Entrada™ Close Coupled Toilet, 1.28GPF

FEATURES

- E-Max® flushing system, high efficiency (1.28GPF/4.8LPF)
- Elongated bowl
- Universal Height
- ADA compliant
- Close coupled, elongated front bowl and tank set, seat sold separately
- Chrome trip lever
- 12" Rough-in

MODELS

- CST244EF
- CST244EFR - Right-hand trip lever

COMPONENTS

- C244EF - Elongated Front Bowl
- ST243E - Tank and cover only - Left hand trip lever (shown in photo)
- ST243ER - Tank and cover only - Right hand trip lever
- SS114 SoftClose® seat (sold separately)

COLORS/FINISHES

- Standard
  #01 Cotton

PRODUCT SPECIFICATION

The two-piece, universal height, high efficiency E-Max flushing system toilet shall be 1.28GPF. Toilet shall have high-profile tank, elongated bowl and chrome trip lever. Toilet shall be ADA compliant and universal height. Toilet shall be **TOTO Model CST244EF___.**

E+ E-Max

CODES/STANDARDS

- Meets and exceeds ASME A112.19.2/CSA B45.1
- Certifications: IAPMO(cUPC)
- Code compliance: UPC, IPC, NSPC, NPC Canada, and others
- ADA compliant (when installed with trip lever located on the approach side)

WC-3 COMMON AREA WATER CLOSET

CST244EF(R)

Entrada™ Close Coupled Toilet, 1.28GPF

SPECIFICATIONS

- Water Use — 1.28 GPF (4.8 LPF)
- Flush System — E-Max
- Min. Water Pressure — 8 psi (flowing)
- Water Surface — 8-3/8" x 10-1/2"
- Trap Diameter — 2-1/8"
- Rough-in — 12"
- Trap Seal — 2-3/8"
- Warranty — One Year Limited Warranty
- Material — Vitreous china
- Shipping Weight — **C244EF** - 53lbs; **ST243E(R)** - 24lbs
- Shipping Dimensions — **C244EF** - 28-1/2" x 16" W1 x 10-1/4" W2 x 17-3/4"; **ST243E(R)** - 16-1/2" x 8-1/4" x 15-3/4"

INSTALLATION NOTES

Back-to-Back Toilet Installations:
TOTO recommends the use of a nationally listed, double sanitary tee-wye only, in vertical waste stacks, in accordance with the stipulations noted in the majority of nationally recognized plumbing codes.

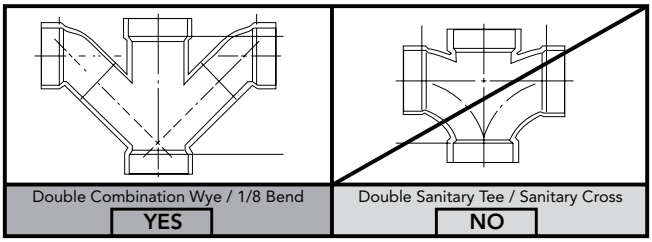

To maintain adequate wall gap between the back of the tank and wall, mount the floor flange at a nominal 12" rough-in distance.

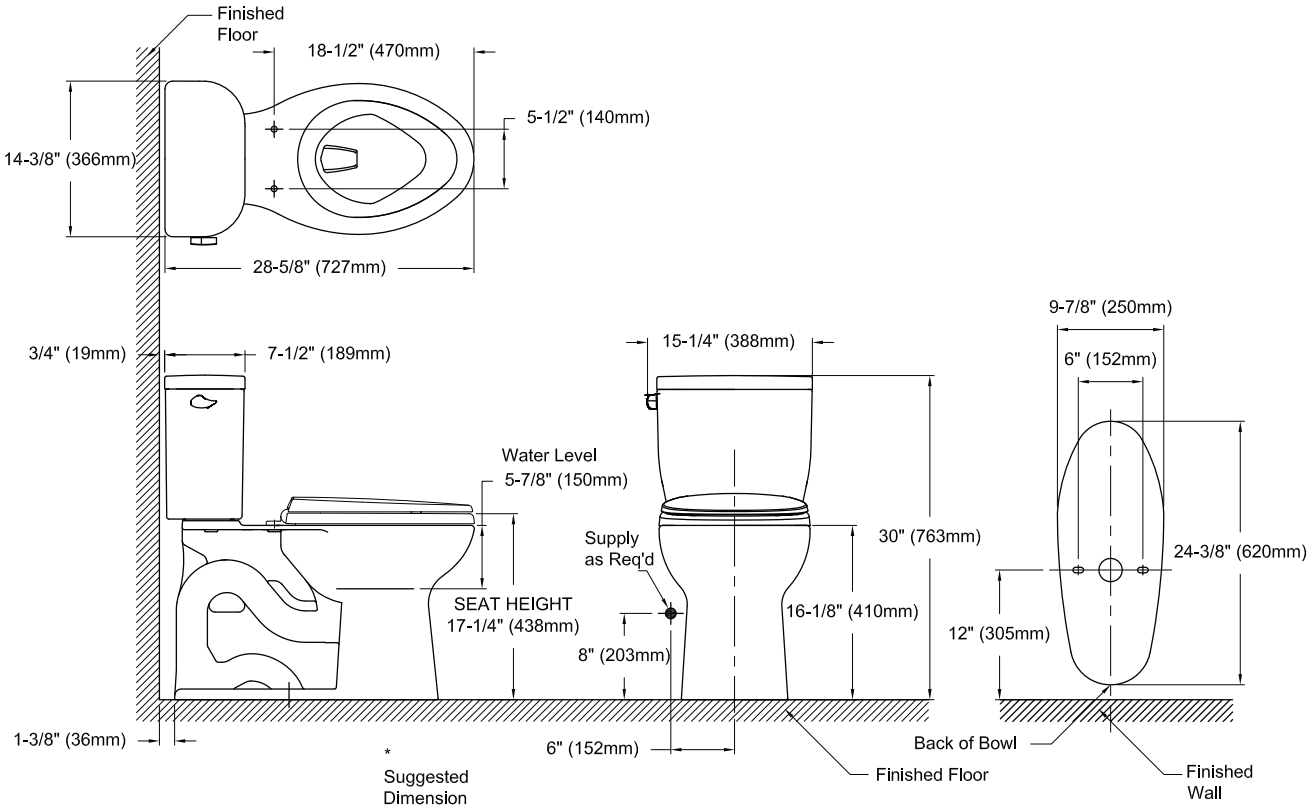

TOTO®

These dimensions and specifications are subject to change without notice

WC-3 COMMON AREA WATER CLOSET

COMMERCIAL HEAVY-DUTY PLASTIC TOILET SEAT

MODEL #	COLOR #
1955CT/1955SSCT	_____

DESCRIPTION:

Open front less cover, elongated, heavy-duty, injection molded solid plastic toilet seat. Features four molded-in bumpers, non self-sustaining (1955CT) or self-sustaining (1955SSCT) check hinges with non-corrosive 300 Series stainless steel posts and pintles and STA-TITE® Commercial Fastening System™. This seat complies with IAPMO/ANSI Z124.5-2013 Plastic Toilet Seats as a class Commercial Heavy Duty.

SPECIFICATIONS:

Size:	Elongated
Material:	Plastic
Style:	Open Front less Cover
Bumpers:	Four
Hinges:	Plastic Non Self-Sustaining (1955CT) or Self-Sustaining (1955SSCT) with 300 Series Stainless Steel Posts and Pintles
Fastening System:	STA-TITE® Commercial Fastening System™

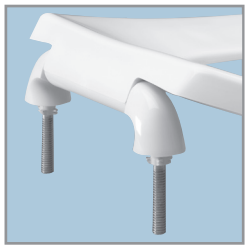

PLASTIC HINGES WITH STAINLESS STEEL POSTS AND PINTLES

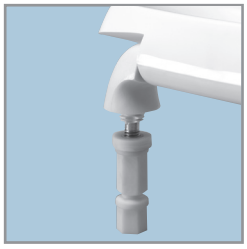

STA-TITE® COMMERCIAL FASTENING SYSTEM™

FEATURES:

STA-TITE® Commercial Fastening System™

Non-Corrosive 300 Series Stainless Steel Posts and Pintles

DIMENSIONS:

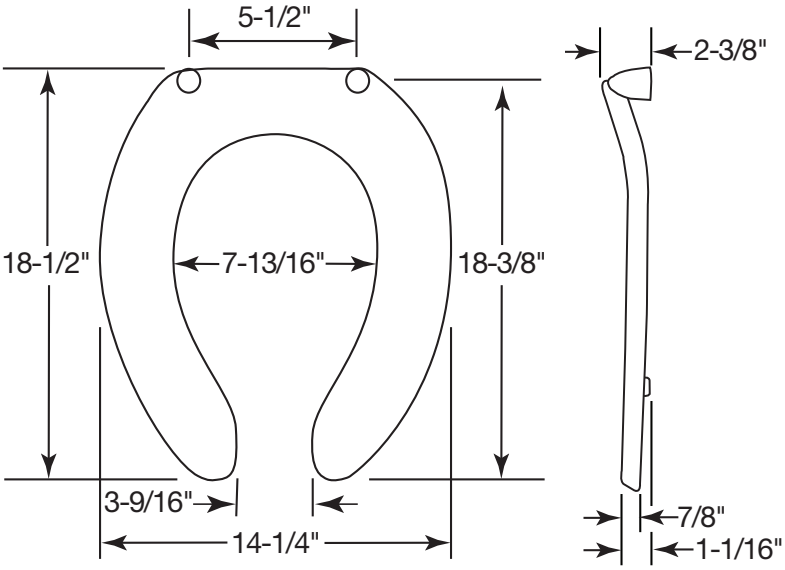

Proudly Made in the USA

Bemis Manufacturing Co., Sheboygan Falls, WI 53085
www.ToiletSeats.com

Phone: 800-558-7651 Fax: 800-292-3647

WC-3 COMMON AREA WATER CLOSET

AQUAFLO®

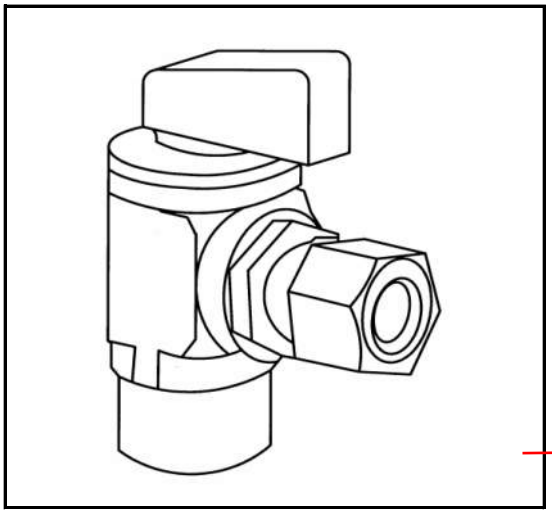

QUARTER-TURN ANGLE VALVES

Specification Sheet

NICKEL		
PART NUMBER	INLET	OUTLET
V-001-A	5/8" O.D. Compr	1/4" O.D. Compr
V-100-A	1/2" Sweat	3/8" O.D. Compr
V-101-A	5/8" O.D. Compr	3/8" O.D. Compr
V-102-A	1/2" F.I.P.	3/8" O.D. Compr
V-103-A	1/2" PEX	3/8" O.D. Compr
V-104-A	1/2" WIRSBO PEX	3/8" O.D. Compr
V-105-A	3/8" F.I.P.	3/8" O.D. Compr
V-106-A	3/8" O.D. Compr	3/8" O.D. Compr
V-107-A	1/2' F.I.P.	3/4" Hose Thread
V-300-A	1/2" Sweat	1/2" O.D. Compr
V-301-A	5/8" O.D. Compr	1/2" O.D. Compr
V-302-A	1/2" F.I.P.	1/2" O.D. Compr
V-303-A	1/2" PEX	1/2" O.D. Compr
V-400-A	1/2" Sweat	1/2" OR 7/16" Slip Joint
V-401-A	5/8" O.D. Compr	1/2" OR 7/16" Slip Joint
V-402-A	1/2" F.I.P.	1/2" OR 7/16" Slip Joint
V-403-A	1/2" PEX	1/2" M.I.P. / Sweat
V-500-A	1/2" CPVC	3/8" O.D. Compr
V-602-A	5/8" O.D. Compr	3/8" O.D. Compr.
POLISHED BRASS		
V-201-A	5/8" O.D. Compr	3/8" O.D. Compr
V-202-A	1/2" F.I.P.	3/8" O.D. Compr

For Lead Free product add "-LL" to the end of the part number.

DESIGN FEATURES

- Quick quarter-turn shut-off.
- Heavy duty brass construction ensures durability.
- Ball style valve will not freeze up.
- Teflon seats for extra wear resistnace.
- Pliable 0-rings will not distort or break down.
- One-year limited warranty

COMPLIANCES/LISTINGS

- IAPMO Certified
- NSF Compliant
- Meet or exceed ASME A112.18.1
- Federal Specification WWP 541E

Certified to NSF/ANSI 61

OPERATING SPECIFICATION

Temperature: 40-180ºF
Pressure: 125 PSI max.

Product Submittal	
Job Name	
Date	
Part Number	Quantity
Architect	
Contractor	

LSP PRODUCTS GROUP
3689 Arrowhead Drive, Carson City, NV 89706
Phone (800) 854-3215 Fax (800) 243-1777
E-mail sales@lspproducts.com Website www.lspproducts.com

Content matter is subject to change at any time. It is the user's responsibility to ensure the most updated revisions are obtained.

AF/S-2017 (05-11) Rev 3

WC-3 COMMON AREA WATER CLOSET

AQUAFLO®

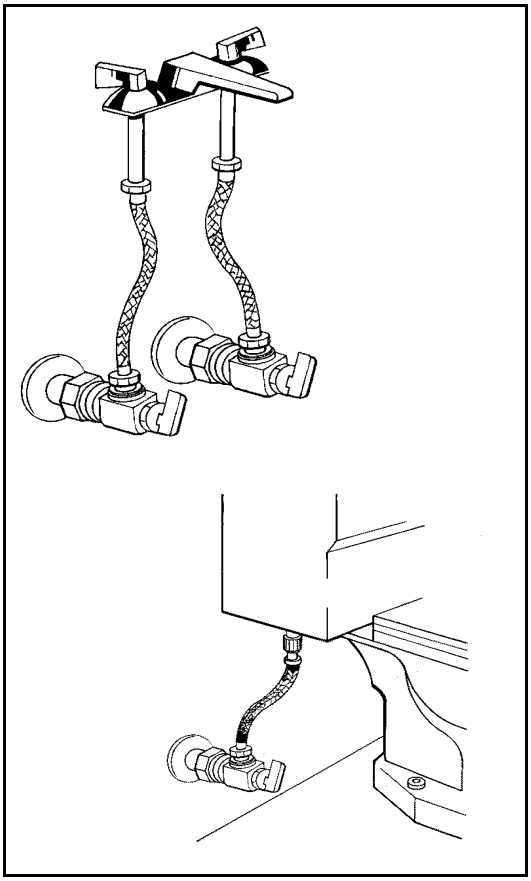

MIGHTYFLEX
STAINLESS STEEL CONNECTORS
Specification Sheet

DESIGN FEATURES
- Chloramine resistant soft cone.
- Exclusive POWR-TIGHT 12-point crimp-many times industry standard.
- Chloramine resistant tubing
- Withstands dramatic changes in water pressure
- Easy installation, no special tools required

COMPLIANCES/LISTINGS
- IAPMO Certified
- NSF Compliant
- ASME A112.18.6

MATERIAL SPECIFICATION
- Working Pressure: 160 psi Maximum
- Operating Temperature: 33°F-140°F
- Tubing: Reinforced PVC, NSF 61 Compliant
- Nuts & End fittings - Nickel Plated Brass
- Washers - NSF 61 Compliant

Product Submittal	
Job Name	
Date	
Part Number	Quantity
Architect	
Contractor	

LSP® PRODUCTS GROUP

3689 Arrowhead Drive, Carson City, NV 89706
Phone (800) 854-3215 Fax (800) 243-1777
E-mail sales@lspproducts.com Website www.lspproducts.com

Content matter is subject to change at any time. It is the user's responsibility to ensure the most updated revisions are obtained.

AF/S-2010 (04-08) Rev 4

WC-3 COMMON AREA WATER CLOSET

AQUAFLO®

MIGHTYFLEX
STAINLESS STEEL CONNECTORS
Specification Sheet

FAUCET CONNECTORS

PART NUMBER	DESCRIPTION	LENGTH
SFC-109-PP	1/2" FIP Soft Cone x 3/8" Soft Compression	9"
SFC-112-PP		12"
SFC-116-PP		16"
SFC-120-PP		20"
SFC-124-PP		24"
SFC-130-PP		30"
SFC-136-PP		36"
SFC-148-PP		48"
SFC-196-PP		96"
SFC-312-PP	1/2" FIP Soft Cone x 1/2" Compression Soft Cone	12"
SFC-316-PP		16"
SFC-320-PP		20"
SFC-324-PP		24"
SFC-330-PP		30"
SFC-348-PP		48"
SFC-409-PP	1/2' FIP Soft Cone x 1/2" FIP Soft Cone	9"
SFC-412-PP		12"
SFC-416-PP		16"
SFC-420-PP		20"
SFC-424-PP		24"
SFC-430-PP		30"
SFC-436-PP		36"
SFC-448-PP		48"
SFC-506-PP	3/8" Soft Compression x 3/8" Soft Compression	6"
SFC-509-PP		9"
SFC-512-PP		12"
SFC-516-PP		16"
SFC-520-PP		20"
SFC-524-PP		24"
SFC-530-PP		30"
SFC-548-PP		48"
SFC-572-PP		72"
SFF-112-PP	1/2" FIP Soft Cone x 3/8" Flare	12"
SFF-116-PP		16"
SFF-120-PP		20"
SFF-130-PP		30"
SFF-312-PP	1/2" FIP Soft Cone x 1/2" Flare	12"
SFF-316-PP		16"
SFF-320-PP		20"
SFF-330-PP		30"

TOILET CONNECTORS

PART NUMBER	DESCRIPTION	LENGTH
SFT-109-PP	7/8" Soft Cone Ballcock x 3/8" Flare	9"
SFT-112-PP		12"
SFT-116-PP		16"
SFT-120-PP		20"
SFT-309-PP	7/8" Soft Cone Ballcock x 1/2" Flare	9"
SFT-312-PP		12"
SFT-316-PP		16"
SFT-320-PP		20"
SWC-106-PP	7/8" Soft Cone Ballcock x 3/8" Soft Compression	6"
SWC-109-PP		9"
SWC-112-PP		12"
SWC-116-PP		16"
SWC-120-PP		20"
SWC-306-PP	7/8" Soft Cone Ballcock x 1/2" Compression Soft Cone	6"
SWC-309-PP		9"
SWC-312-PP		12"
SWC-316-PP		16"
SWC-320-PP		20"
SWC-406-PP	7/8" Soft Cone Ballcock x 1/2" FIP Soft Cone	6"
SWC-409-PP		9"
SWC-412-PP		12"
SWC-416-PP		16"
SWC-420-PP		20"
SWC-406-PP	7/8" Soft Cone Ballcock x 1/2" FIP Soft Cone	6"
SWC-409-PP		9"
SWC-412-PP		12"
SWC-416-PP		16"
SWC-420-PP		20"
KWC-109-PP	7/8" Soft Cone Ballcock x 3/8" Compression Hard Cone	9"
KWC-112-PP		12"
KWC-116-PP		16"
KWC-120-PP		20"
KWC-309-PP	7/8" Soft Cone Ballcock x 1/2" Compression Hard Cone	9"
KWC-312-PP		12"
KWC-316-PP		16"

LSP® PRODUCTS GROUP

3689 Arrowhead Drive, Carson City, NV 89706
Phone (800) 854-3215 Fax (800) 243-1777
E-mail sales@lspproducts.com Website www.lspproducts.com

Content matter is subject to change at any time. It is the user responsibility to ensure the most updated revisions are obtained.

AF/S-2010 (04-03) Rev 3